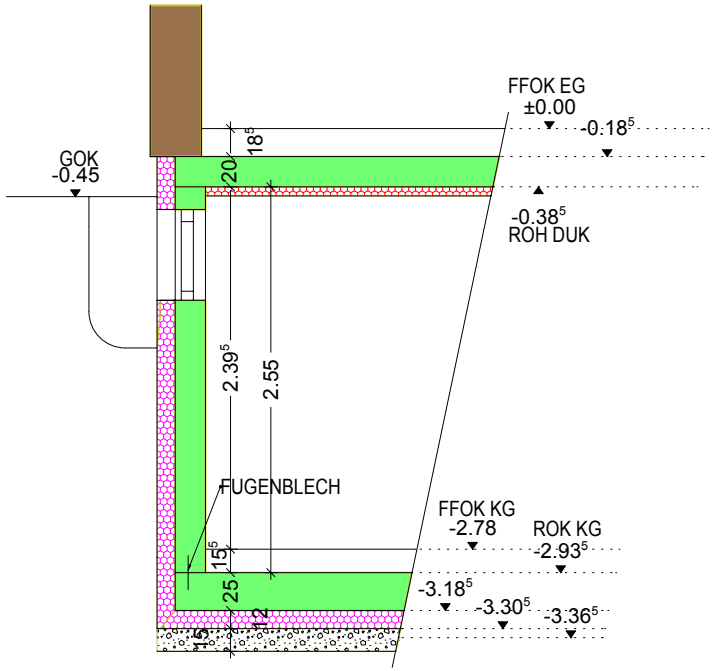
FFOK EG
±0.00
-0.18⁵
18⁵
20
GOK
-0.45
-0.38⁵
ROH DUK
2.39⁵
2.55
FUGENBLECH
FFOK KG
-2.78
ROK KG
-2.93⁵
15⁵
25
-3.18⁵
-3.30⁵
-3.36⁵
12
15